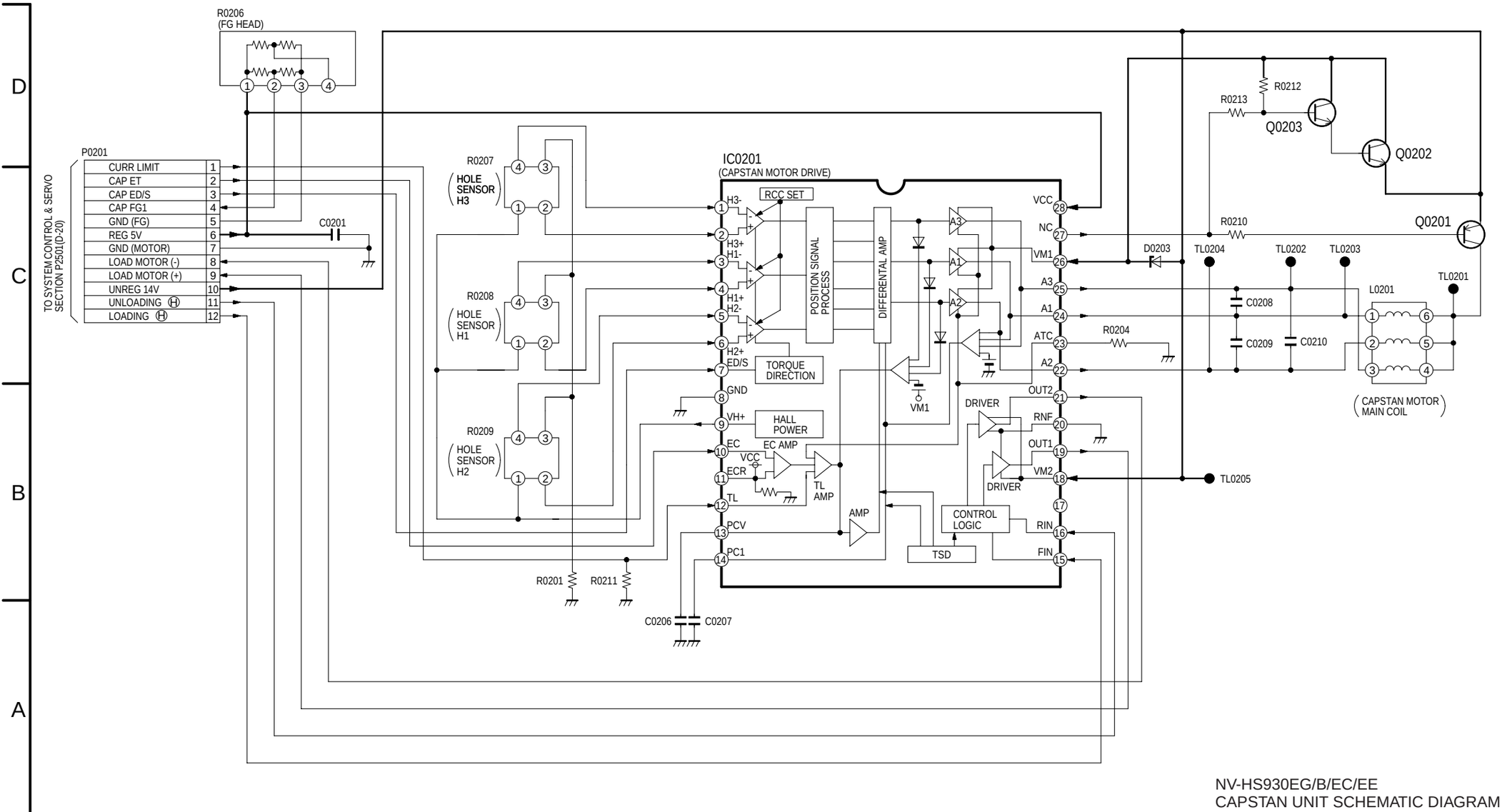

NV-HS930EG/B/EC/EE
CAPSTAN UNIT SCHEMATIC DIAGRAM